ZANUSSI PROFESSIONAL

ITEM #

MODEL #

NAME #

SIS #

AIA #

Drop-In
Drop-in remote refrigerated quartz surface (1 GN container capacity)

341136 (D21R1)	Drop-in remote refrigerated quartz surface (1 GN container capacity)

Short Form Specification

Item No.

Designed to be positioned in flush installation providing improved cleanability and suitable for modern design installations. Designed to serve the food on plates. Food introduced at the correct temperature maintains its core temperature according to Afnor Standards. Automatic defrosting guarantees evaporators clearance and efficient cooling. Digital control with temperature display with precise adjustment (0,1°C). Fully compliant HACCP digital controls include visible alarms. The bottom is equipped with copper tubes to ensure proper cooling, with this system the air touches the cold surface and gets cooled. It comes with stylish white coloured quartz top and stainless steel frame that makes it ideal to serve cold dishes in an elegant way. Equipped with a drain hole to easily discharge top condensation. AISI 304 Stainless steel frame with rounded corners to facilitate cleaning operations. High-density expanded polyurethane foam with cyclopenthane guarantees excellent well insulation to reduce energy dispersion. Preadjusted connection to remote cooling unit (not included). Refrigerant type R452a other gases are available on request.

APPROVAL:

Main Features

- Preadjusted connection to remote cooling unit (not included).
- CB and CE certifed by a third party notified body.
- Designed to be positioned in flush installation providing improved cleanability and suitable for modern design installations.
- Precise temperature control and setting at 0,1°C .
- As standard the product comes with digitally controlled thermostat which is in line of HACCP norms and provides visual alarm as a warning of the increasing or decreasing temperatures.
- Available drop-in dimensions: 1, 2, 3, 4, 5, 6 GN.
- Food introduced at the correct temperature maintains its core temperature according to Afnor Standards.
- Automatic defrosting guarantees evaporators clearance and efficient well cooling.
- Designed to serve the food on plates .
- When the temperature of the surface is cooled down to below 0 °C, the humidity in the air forms ice on the surface. If there is air circulation in the ambient, there is condensation on the surface instead of ice.
- Equipped with a drain hole to easily discharge top condensation.
- It comes with stylish white coloured quartz top and stainless steel framed that makes it ideal to serve cold dishes in an elegant way.
- Built-in cooling unit version is available.

Construction

- Electronic control with temperature display.
- IPx2 water protection.
- The bottom is equipped with copper tubes to ensure proper cooling, with this system the air touches the cold surface and gets cooled.
- AISI 304 Stainless steel frame with rounded corners to facilitate cleaning operations.
- White quartz surface (other quartz colors are available on request).

Sustainability

- High-density expanded polyurethane foam with cyclopenthane guarantees excellent well insulation to reduce energy dispersion.

Drop-In
Drop-in remote refrigerated quartz surface (1 GN container capacity)

Rear side

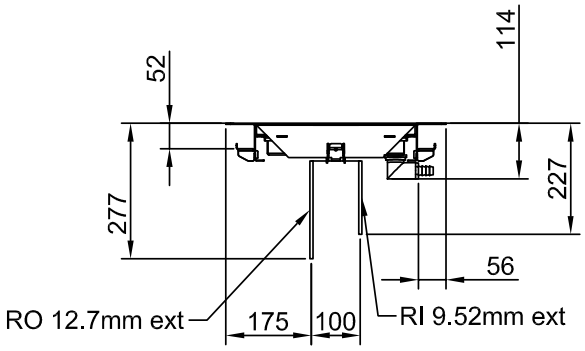

Side

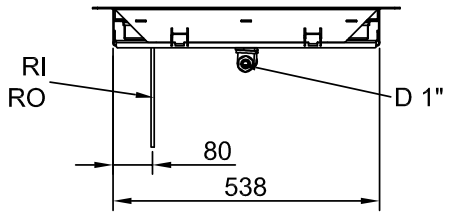

D = Drain
EI = Electrical inlet (power)
RI = Refrigerant Inlet

Top

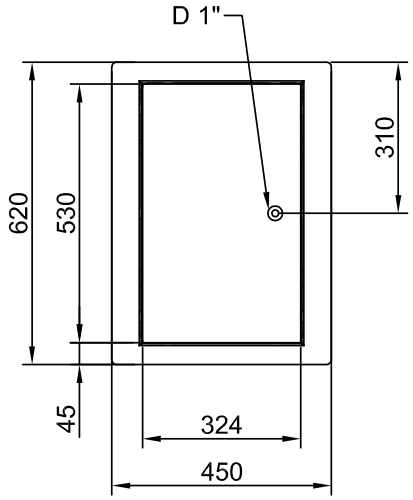

Electric

Supply voltage:	
341136 (D21R1)	220-240 V/1N ph/50 Hz
Electrical power max.:	0.02 kW

Water:

Water drain outlet size:	1"

Key Information:

External dimensions, Width:	450 mm
External dimensions, Depth:	620 mm
External dimensions, Height:	80 mm
Net weight:	12 kg
Shipping weight:	ISO 9001; ISO 14001 kg
Shipping height:	200 mm
Shipping width:	490 mm
Shipping depth:	660 mm
Shipping volume:	0.06 m³
Top temperature:	-10 / 0 °C

Refrigeration Data

Refrigerant type:	R452A
Suggested refrigeration power:	725 W
Condition at condensation temperature:	45 °C
Condition at ambient temperature:	25 °C
Connection pipes (remote) - outlet:	12.7 mm
Connection pipes (remote) - inlet:	9.52 mm

Sustainability

Noise level:	0 dBA

The company reserves the right to make modifications to the products without prior notice. All information correct at time of printing.

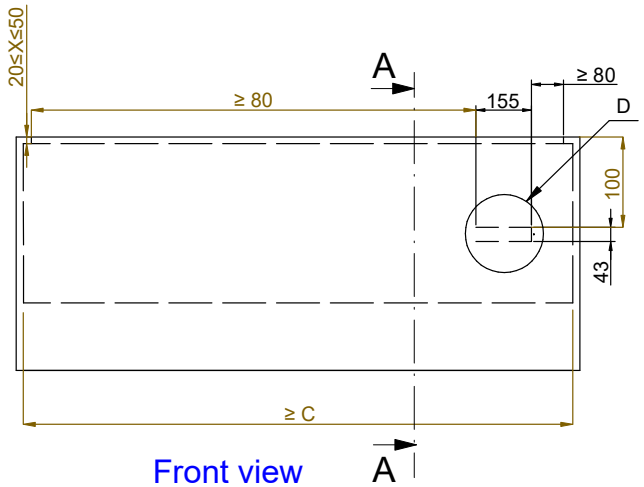

Front view
Scala: 1:10

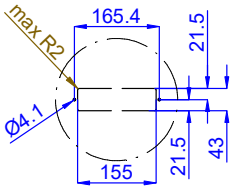

Dettaglio D
Scala 1:7

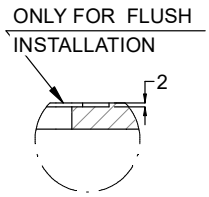

Dettaglio B
Scala 1:2

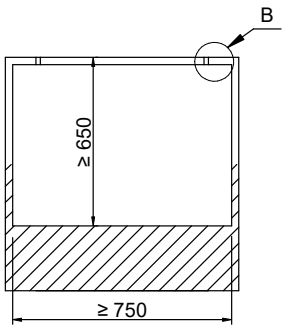

Section Cut A-A
Scala: 1:10

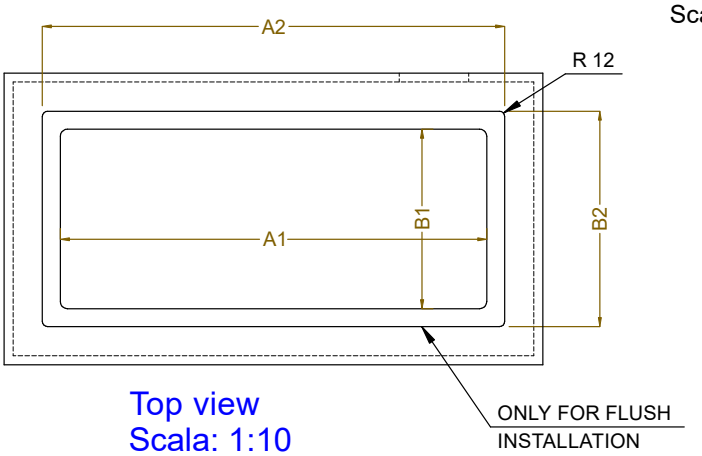

Top view
Scala: 1:10

CAPACITY	CUTOUT		LOWERING FOR FLUSH INSTALLATION		C
	A1	B1	A2	B2	
1GN	355	560	454	624	535
2GN	680		774		855
3GN	1010		1104		1190
4GN	1330		1424		1510
5GN	1660		1744		1835
6GN	1985		2074		2165

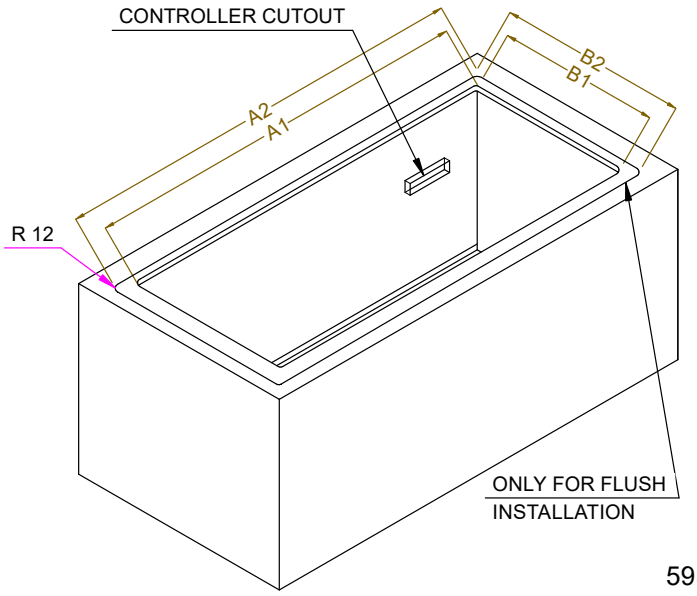

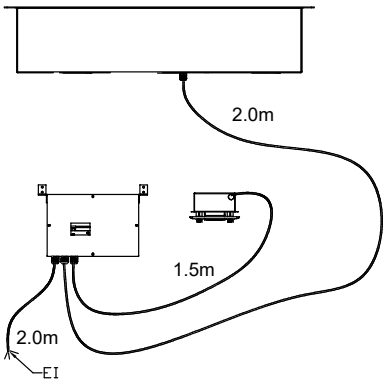

595T02000 - COLD SURFACE REMOTE

The company reserves the right to make modifications to the products without prior notice. All information correct at time of printing.

2024.10.07